FILLTRONIC

OXYGEN, WATER, & CARBON DIOXIDE REMOVAL
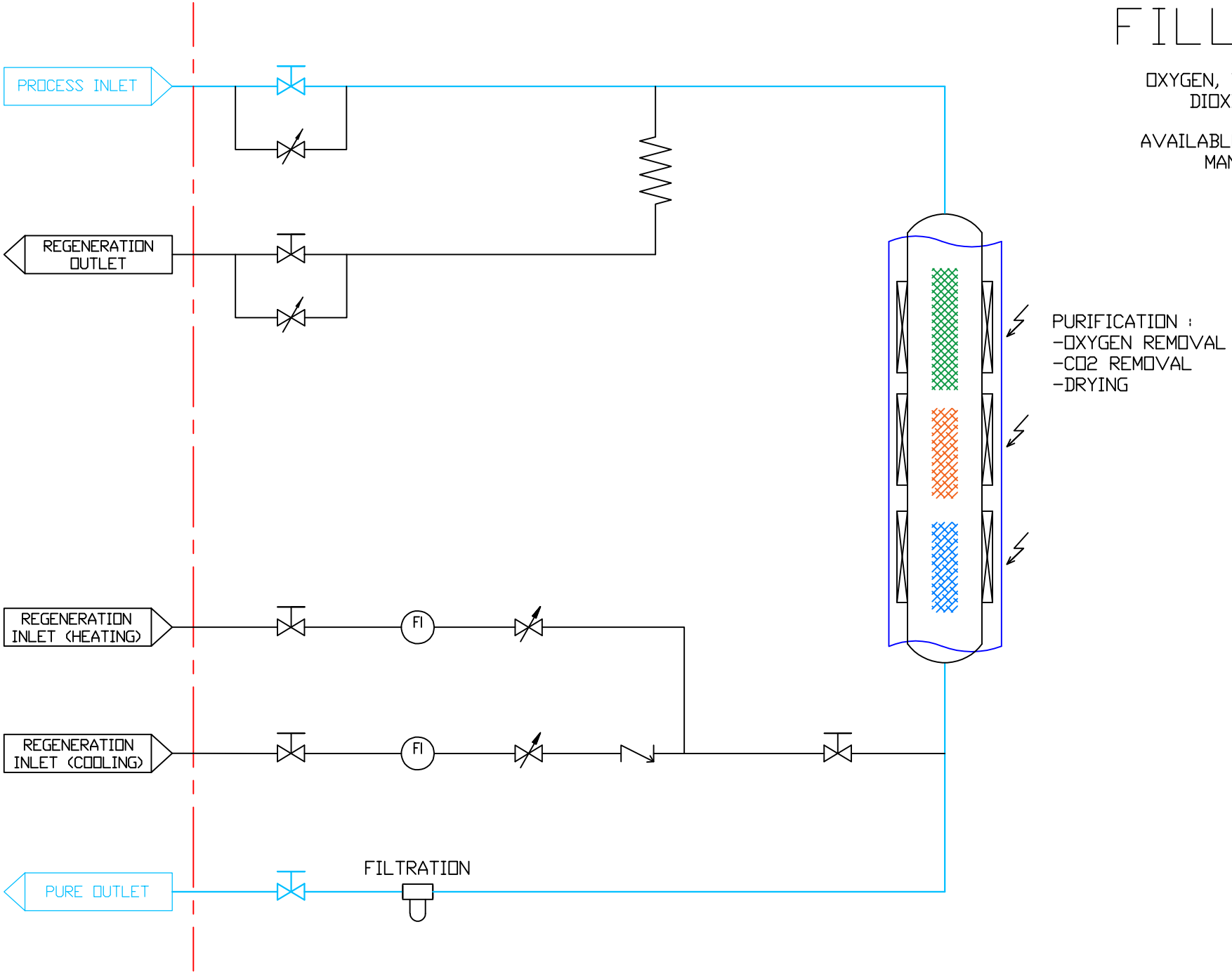
AVAILABLE IN AUTOMATIC & MANUAL TYPES